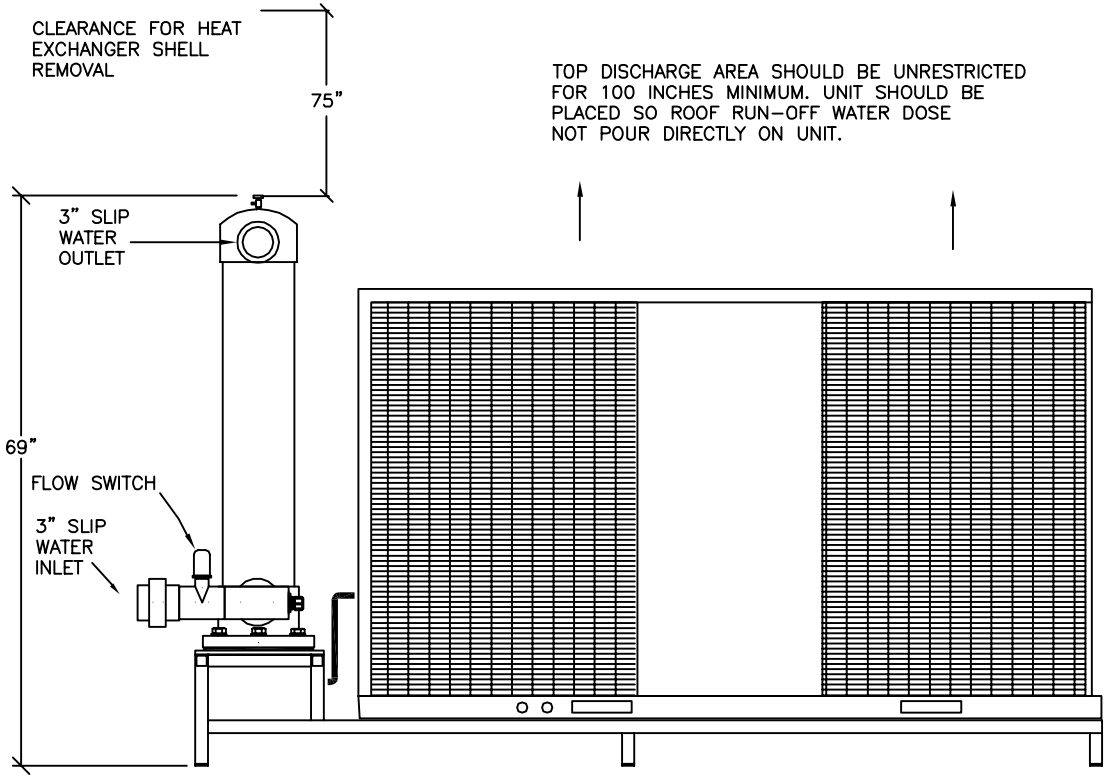

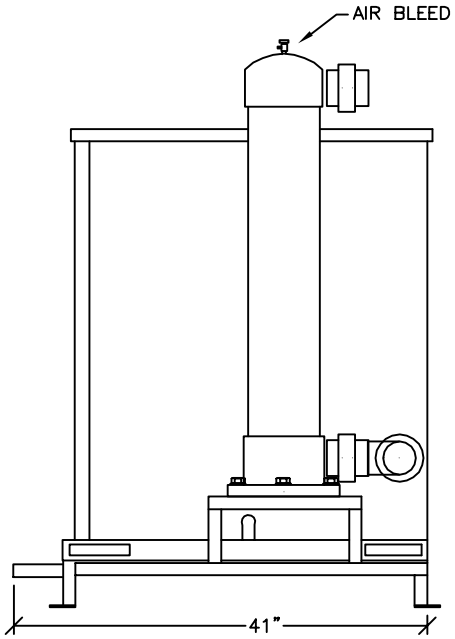

MINIMUM CLEARANCE FOR PROPER OPERATION IS 36 INCHES FROM THE WALLS, SHRUBBERY, FENCES, ETC. MINIMUM CLEARANCE BETWEEN ADJACENT UNITS IS 72 INCHES.

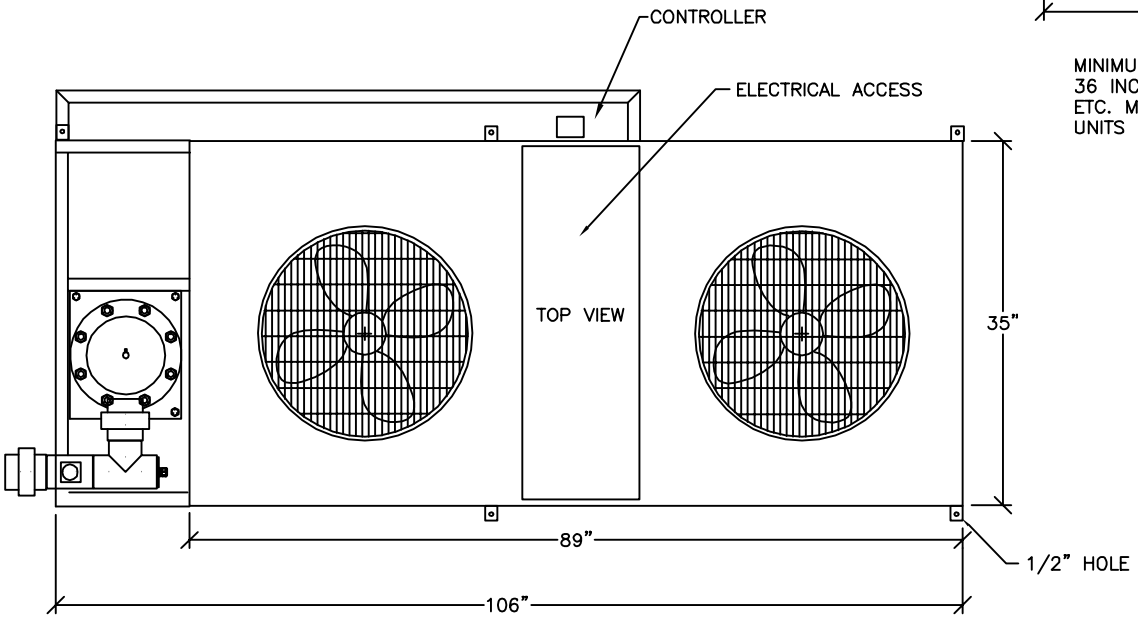

SPECIFICATIONS:

MODEL NO:	MT-15
HP:	15
VOLTS / PH / Hz	208 - 240 / 3 / 60
VOLTAGE MIN-MAX	197 - 253
TOTAL UNIT AMPS	67.2
MIN. CIRCUIT AMP.	90
MIN. FUSE SIZE	80
MAX. FUSE	90
MAX. BTUH OUTPUT	175,000
MIN - MAX WATER FLOW	120 / 180 GPM
FANS CFM EA	5500
SHIPPING WEIGHT	1400 LBS
REFRIGERANT TYPE	R-22

aquaLOGIC
Aqua Logic, Inc.
8268 Clairemont Mesa Blvd. Suite 302
San Diego, CA 92111

TITLE: MT-15 230V 3ϕ CHILLER

LAST UPDATE: 10-27-06	DATE: 12-1-03	FILE: MT-15 230V 3PH	BY CE